UNIVERSITY OF CAMBRIDGE INTERNATIONAL EXAMINATIONS
General Certificate of Education Advanced Level

CANDIDATE NAME

CENTRE NUMBER

CANDIDATE NUMBER

8877373331

PHYSICS **9702/53**

Paper 5 Planning, Analysis and Evaluation **May/June 2011**

1 hour 15 minutes

Candidates answer on the Question Paper.

No Additional Materials are required.

READ THESE INSTRUCTIONS FIRST

Write your Centre number, candidate number and name on all the work you hand in.
Write in dark blue or black pen.
You may use a soft pencil for any diagrams, graphs or rough working.
Do not use staples, paper clips, highlighters, glue or correction fluid.
DO **NOT** WRITE IN ANY BARCODES.

Answer **all** questions.
You may lose marks if you do not show your working or if you do not use appropriate units.

At the end of the examination, fasten all your work securely together.
The number of marks is given in brackets [ ] at the end of each question or part question.

For Examiner's Use	
1	
2	
Total	

This document consists of **8** printed pages.

DC (LEO/SW) 41845
© UCLES 2011

1 A student wishes to investigate projectile motion.

For Examiner's Use

A small ball is rolled with velocity v along a horizontal surface. When the ball reaches the end of the horizontal surface, it falls and lands on a lower horizontal surface. The vertical displacement of the ball is p and the horizontal displacement of the ball is q, as shown in Fig 1.1.

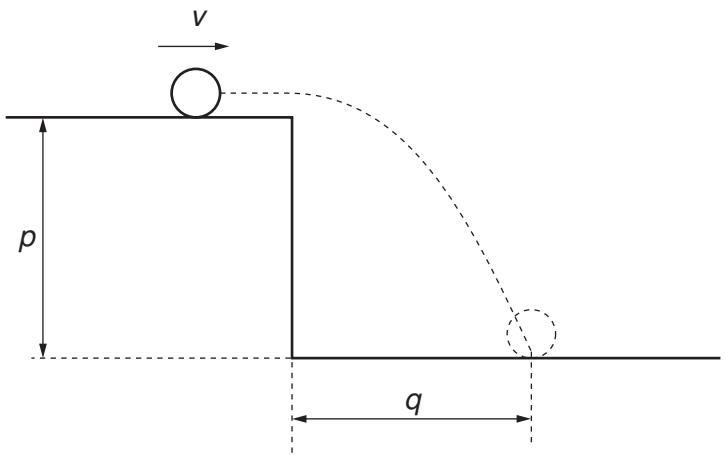

Fig. 1.1

It is suggested that

$$gq^2 = 2pv^2$$

where g is the acceleration of free fall.

Design a laboratory experiment to investigate how q is related to p and how v may be determined from the results. You should draw a diagram, on page 3, showing the arrangement of your equipment. In your account you should pay particular attention to

(a) the procedure to be followed,

(b) the measurements to be taken,

(c) the control of variables,

(d) the analysis of the data,

(e) the safety precautions to be taken.

[15]

© UCLES 2011

Diagram

For Examiner's Use

.....

.....

.....

.....

.....

.....

.....

.....

.....

.....

.....

.....

.....

.....

.....

For Examiner's Use

For Examiner's Use	Defining the problem	Methods of data collection	Method of analysis	Safety considerations	Additional detail

2 A student is investigating a non-inverting operational amplifier (op-amp) circuit.

For Examiner's Use

The circuit is set up as shown in Fig. 2.1.

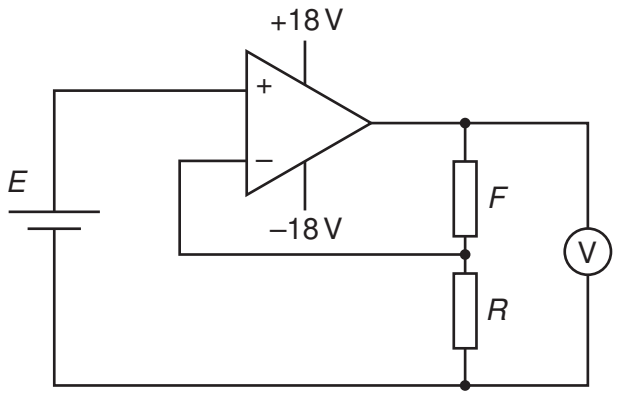

Fig. 2.1

The op-amp is connected to a +18 V and –18 V power supply.

E is the e.m.f. of the cell, which has a value of 1.6 ± 0.1 V.

An experiment is carried out to investigate how the reading *V* on the voltmeter varies with resistance *R*.

Question 2 continues on the next page.

For Examiner's Use

It is suggested that V and R are related by the equation

$$V = \frac{F}{R}E + E$$

where F is the resistance of the fixed resistor in the circuit.

(a) A graph is plotted of $\frac{V}{E}$ on the y-axis against $\frac{1}{R}$ on the x-axis. Express the gradient in terms of F.

gradient = ...[1]

(b) Values of R and V are given in Fig. 2.2.

R/Ω	V/V	$\frac{1}{R}/10^{-3}\,\Omega^{-1}$	$\frac{V}{E}$
150	14.4 ± 0.1		
220	10.4 ± 0.1		
330	7.4 ± 0.1		
470	5.6 ± 0.1		
680	4.4 ± 0.1		
860	3.8 ± 0.1		

Fig. 2.2

Calculate and record values of $\frac{1}{R}/10^{-3}\,\Omega^{-1}$ and $\frac{V}{E}$ in Fig. 2.2. Include the absolute uncertainties in $\frac{V}{E}$. [3]

(c) **(i)** Plot a graph of $\frac{V}{E}$ against $\frac{1}{R}/10^{-3}\,\Omega^{-1}$. Include error bars for $\frac{V}{E}$. [2]

(ii) Draw the straight line of best fit and a worst acceptable straight line on your graph. Both lines should be clearly labelled. [2]

(iii) Determine the gradient of the line of best fit. Include the uncertainty in your answer.

gradient = ...[2]

© UCLES 2011

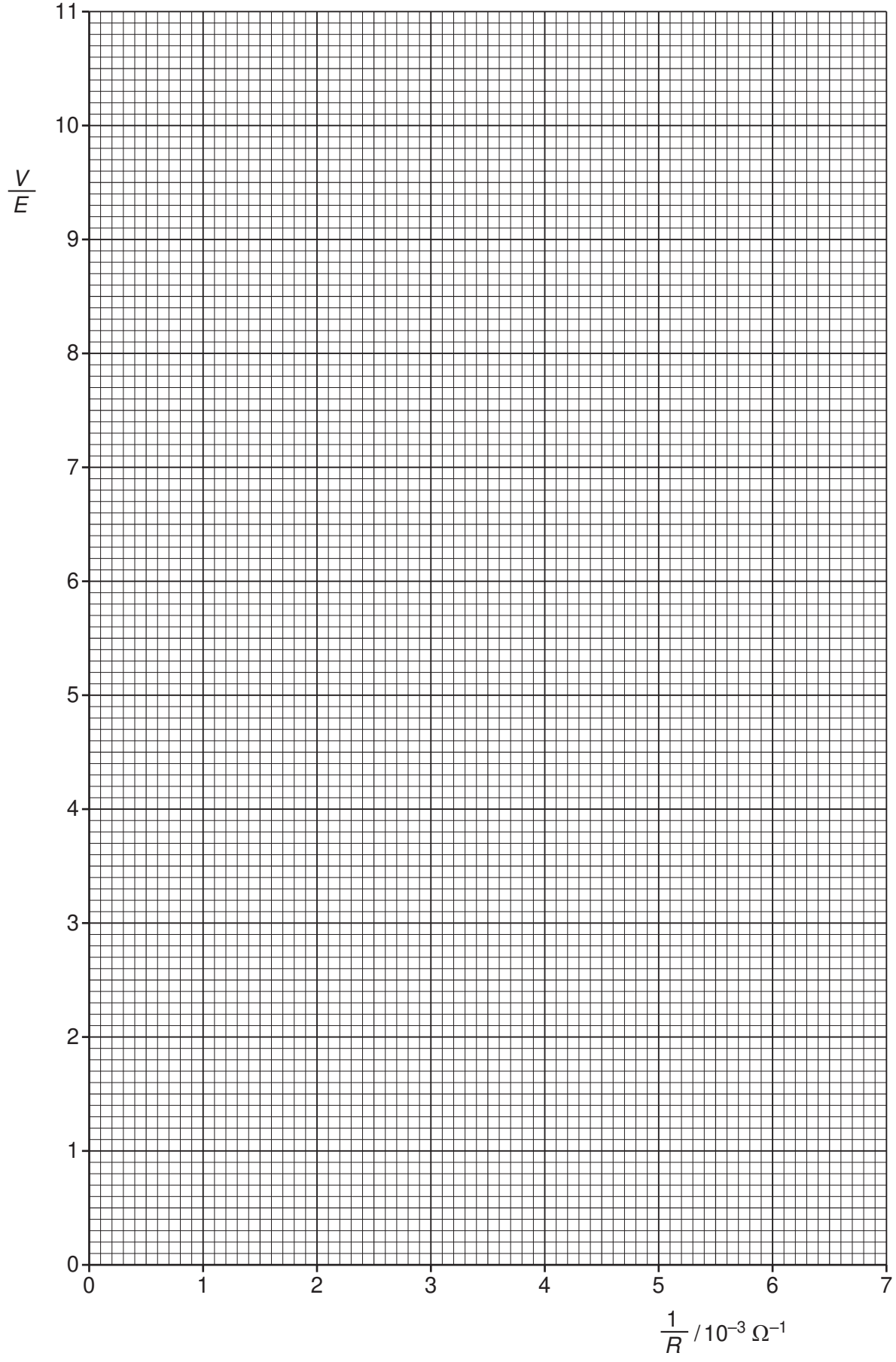

For Examiner's Use

(d) Using your answer in **(c)(iii)**, determine the value of F. Include the absolute uncertainty in your value and an appropriate unit.

For Examiner's Use

F = ...[2]

(e) For one measurement, R has a value of $120\,\Omega \pm 5\%$.

(i) Determine the value of $\frac{V}{E}$ using the relationship given and your answer in **(d)**. Include the absolute uncertainty in your answer.

$\frac{V}{E}$ = ...[2]

(ii) Determine the expected voltmeter reading.

voltmeter reading = ... V [1]

Permission to reproduce items where third-party owned material protected by copyright is included has been sought and cleared where possible. Every reasonable effort has been made by the publisher (UCLES) to trace copyright holders, but if any items requiring clearance have unwittingly been included, the publisher will be pleased to make amends at the earliest possible opportunity.

University of Cambridge International Examinations is part of the Cambridge Assessment Group. Cambridge Assessment is the brand name of University of Cambridge Local Examinations Syndicate (UCLES), which is itself a department of the University of Cambridge.